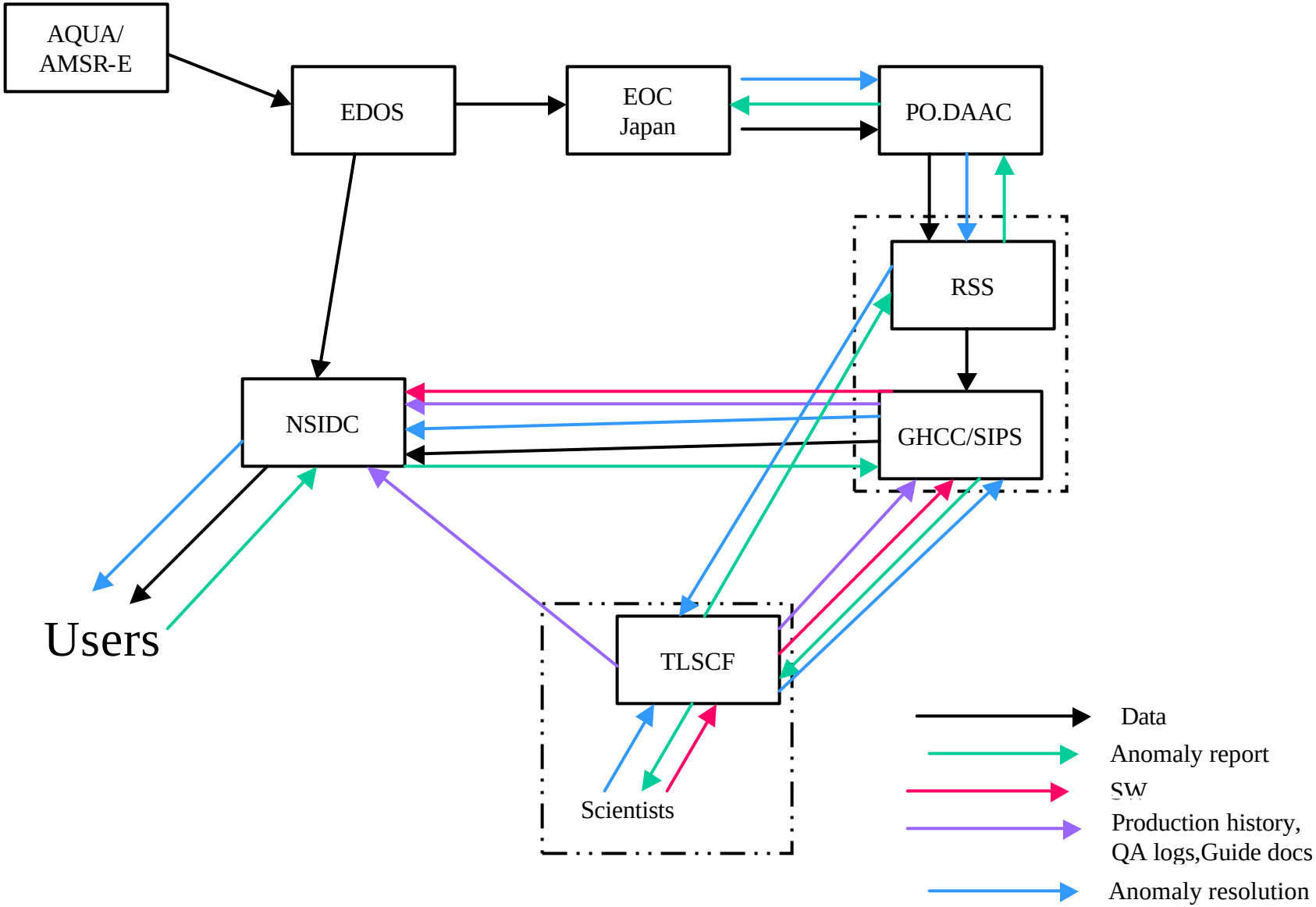
AQUA/
AMSR-E
EDOS
EOC
Japan
PO.DAAC
RSS
NSIDC
GHCC/SIPS
Users
TLSCF
Scientists
Data
Anomaly report
SW
Production history,
QA logs,Guide docs
Anomaly resolution